AGIJ30: INSULATED JACKET, 30"

HESTAN

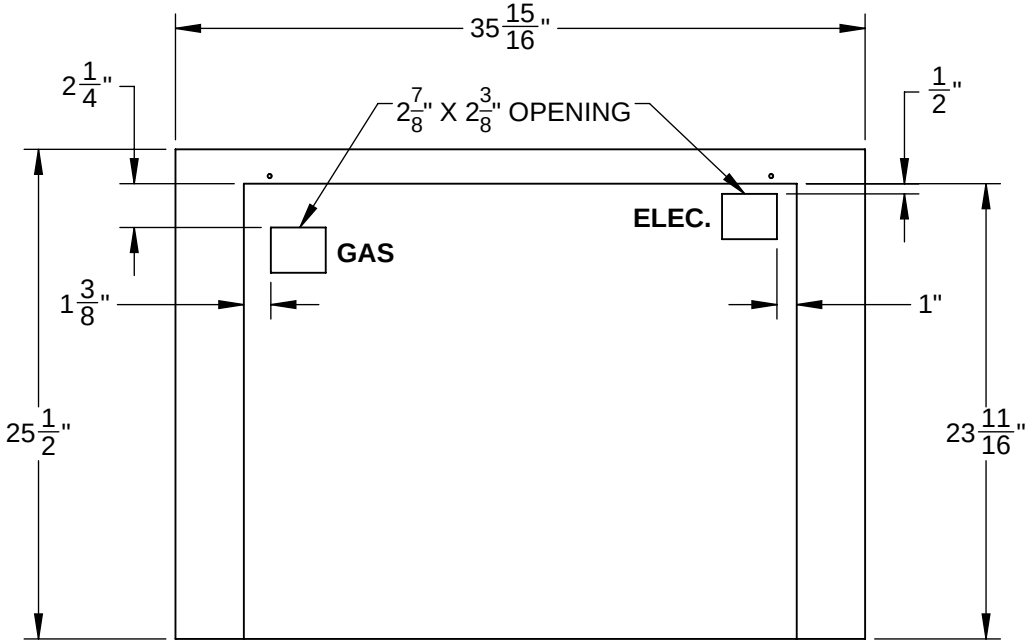

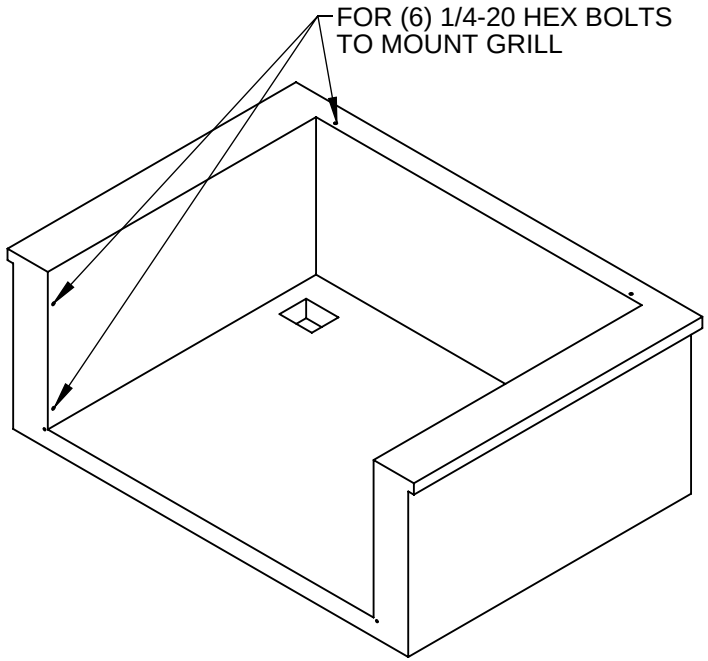

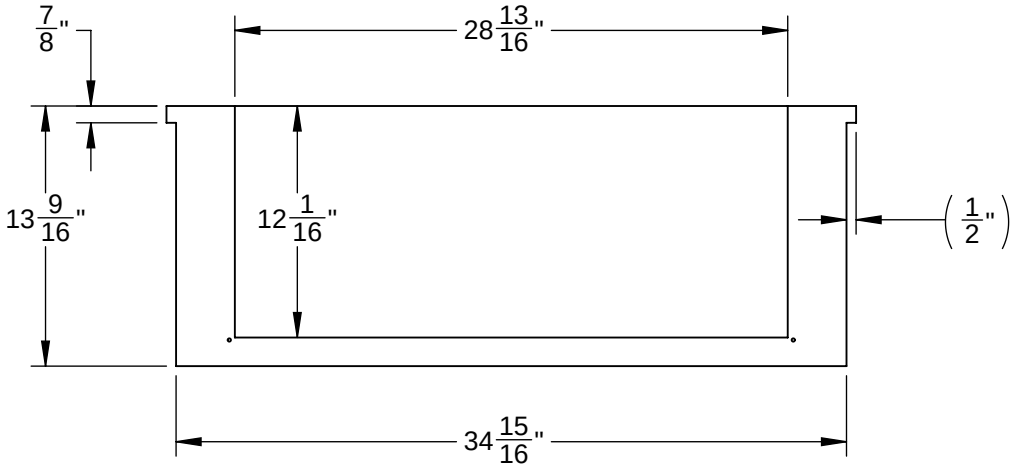

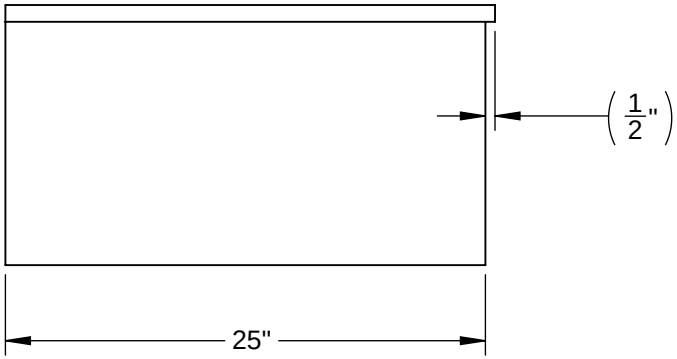

Revised: 09/12/2018

AGIJ30: INSULATED JACKET, 30"

HESTAN

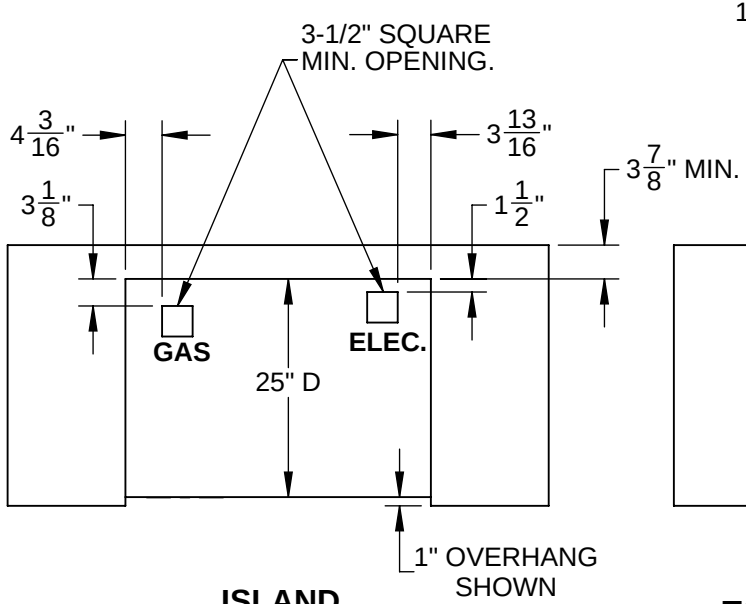

ISLAND TOP VIEW

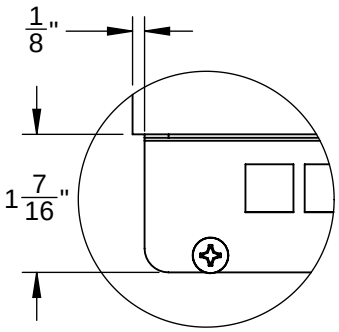

DETAIL A

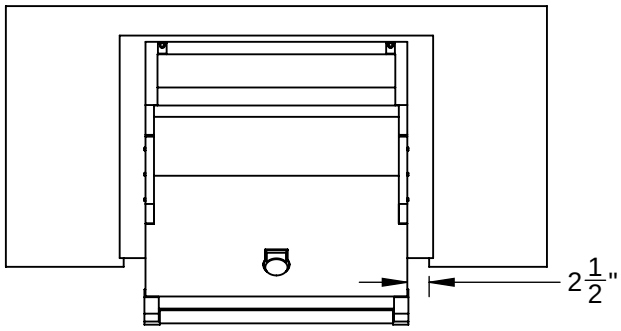

TOP VIEW (UNIT INSTALLED)

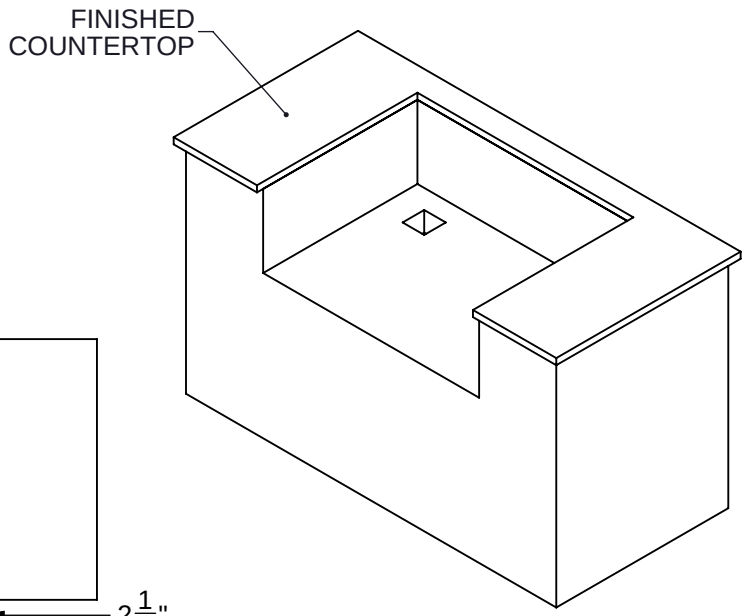

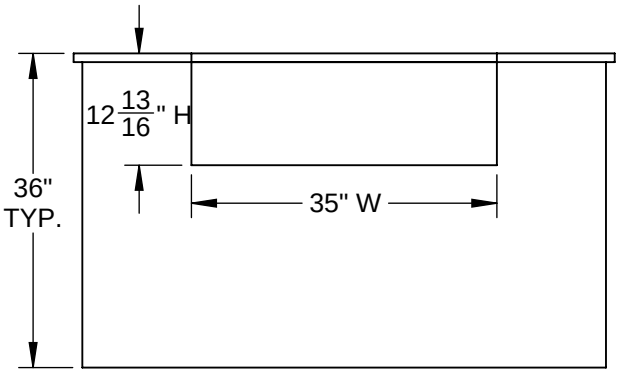

ISLAND FRONT VIEW

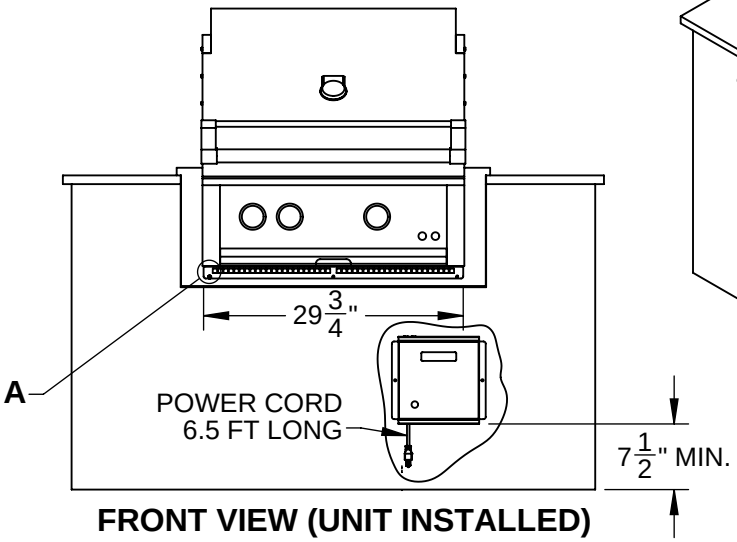

FRONT VIEW (UNIT INSTALLED)

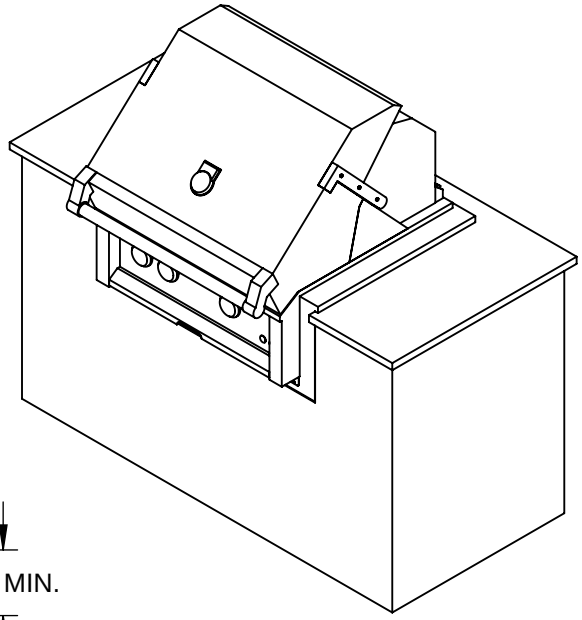

Revised: 09/12/2018