AETRC20: TRASH CENTER STORAGE DRAWER, 20"

HESTAN

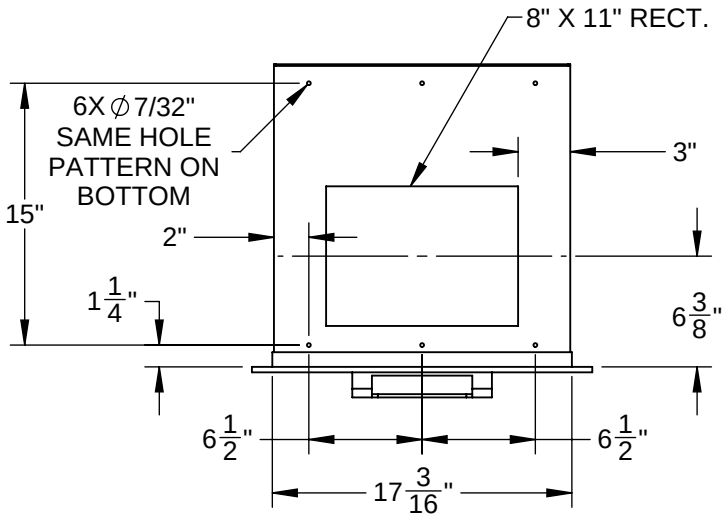

CUTOUT DIMENSIONS:
26" H - 17 1/4" W - 18" D

INCLUDED TRASH
BIN NOT SHOWN

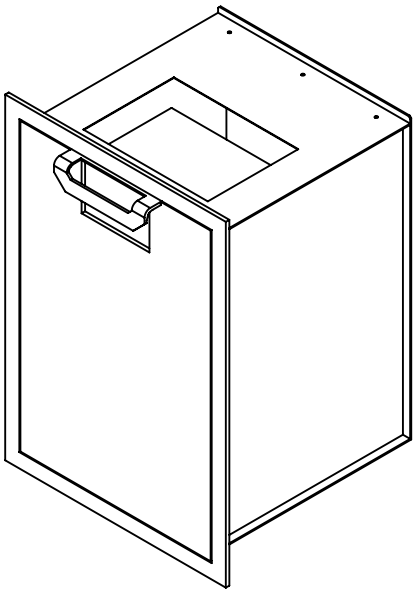

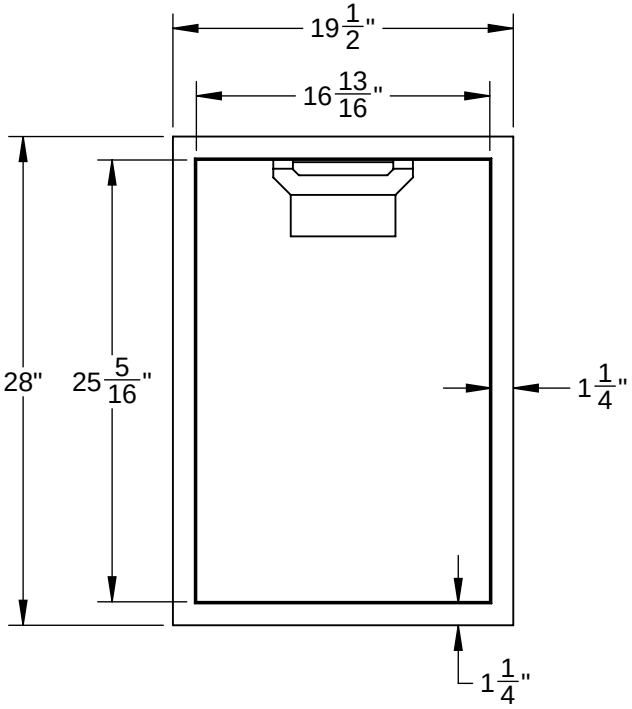

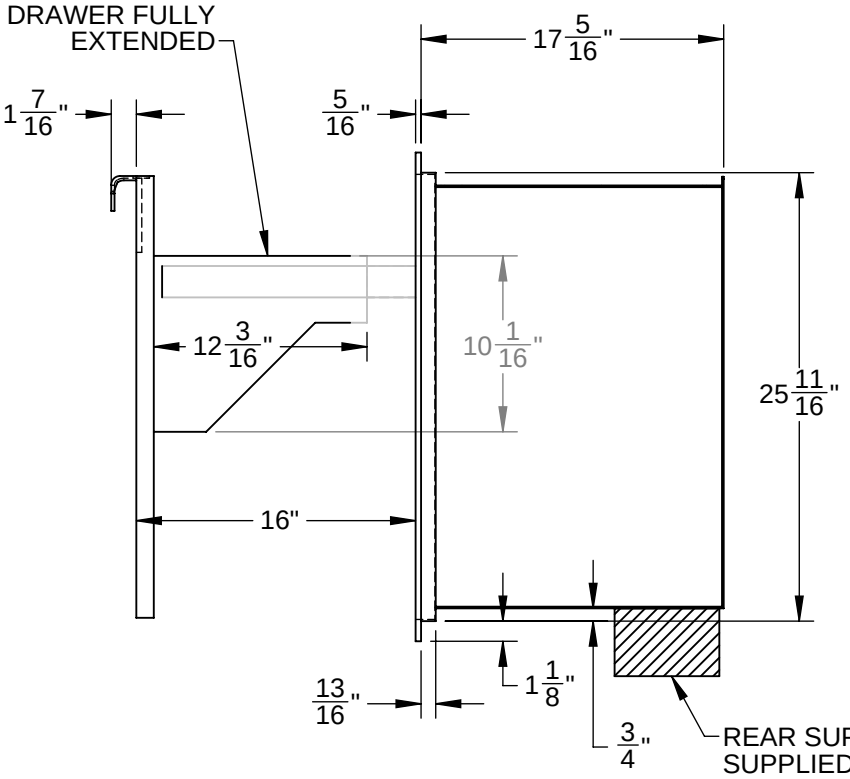

Revised: 09/12/2018