AEPTD16: PAPER TOWEL DISPENSER, 16"

HESTAN

PAPER TOWEL DISPENSER CAN BE
INSTALLED IN 3 DIFFERENT ORIENTATIONS
(HANDLE ON LEFT, RIGHT, & TOP)

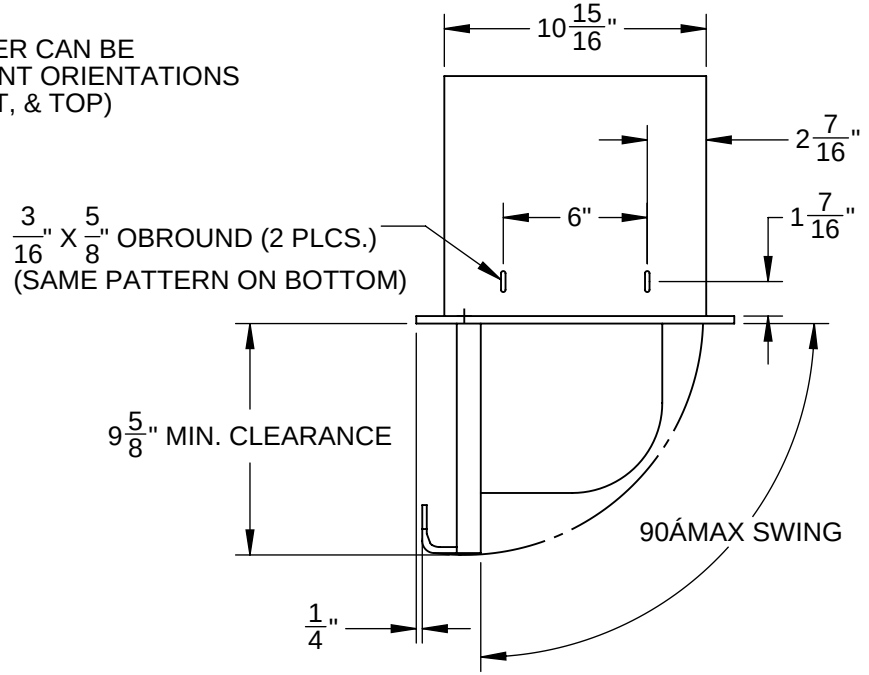

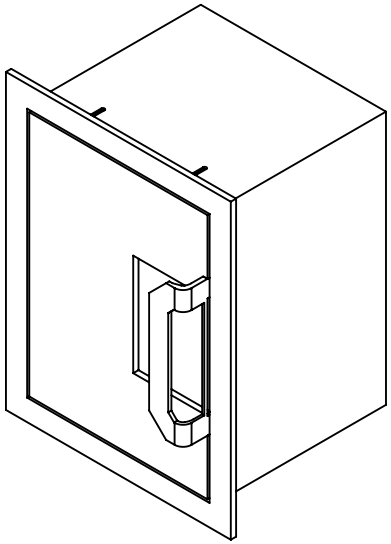

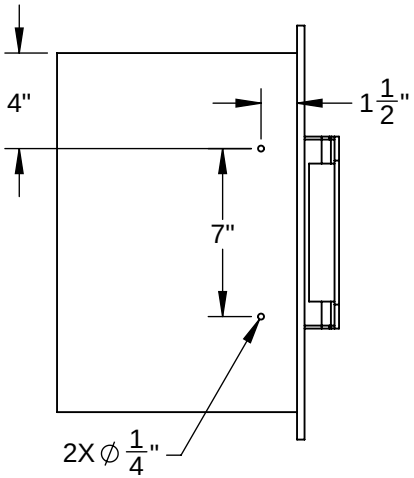

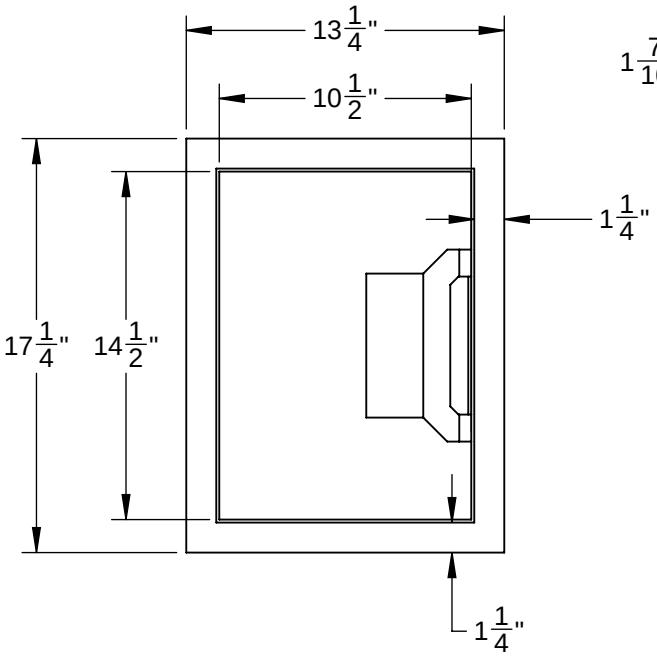

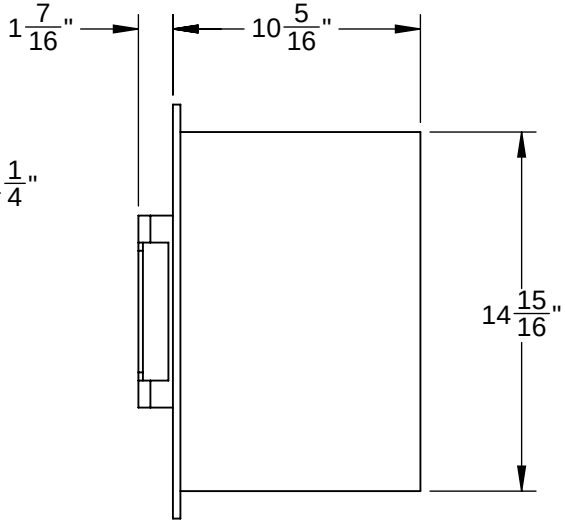

CUTOUT DIMENSIONS:
15" H - 11 1/8" W - 10 1/8" D

Revised: 09/12/2018