AEDR16: DOUBLE DRAWER, 16"

HESTAN

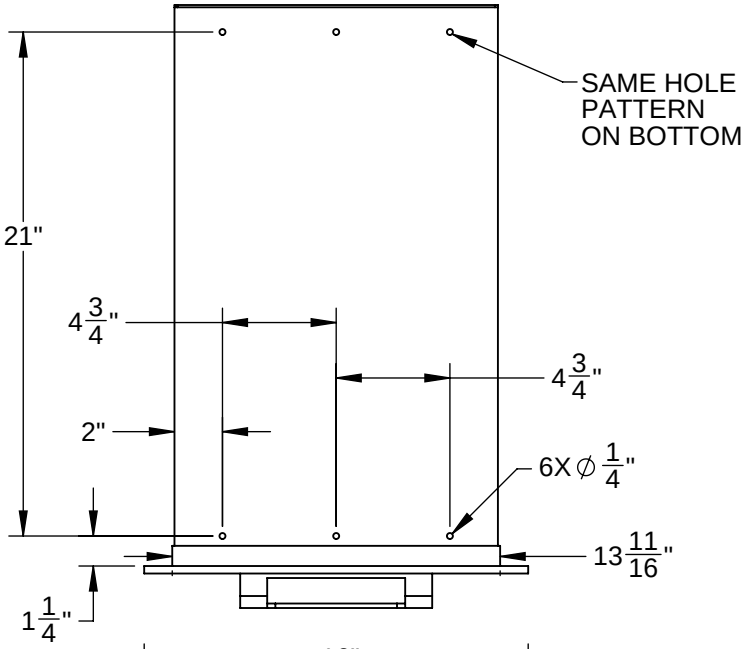

CUTOUT DIMENSIONS:
19" H - 13 7/8" W - 23 3/8" D

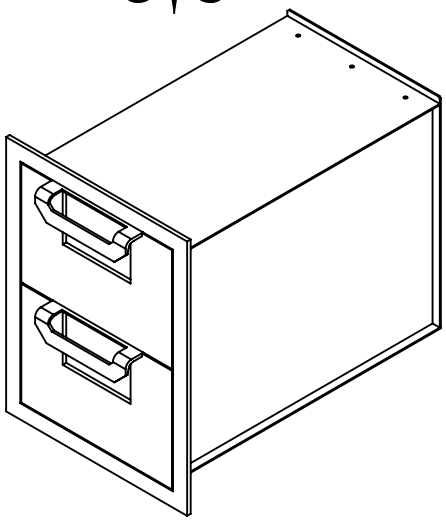

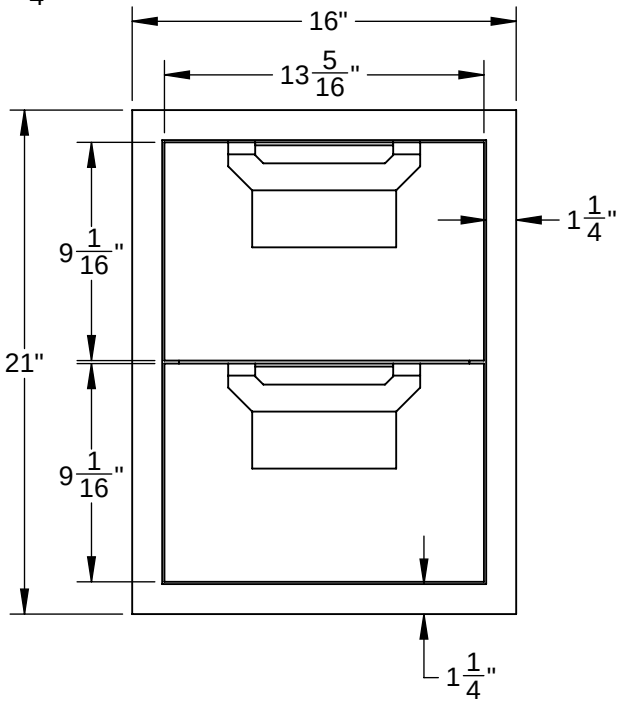

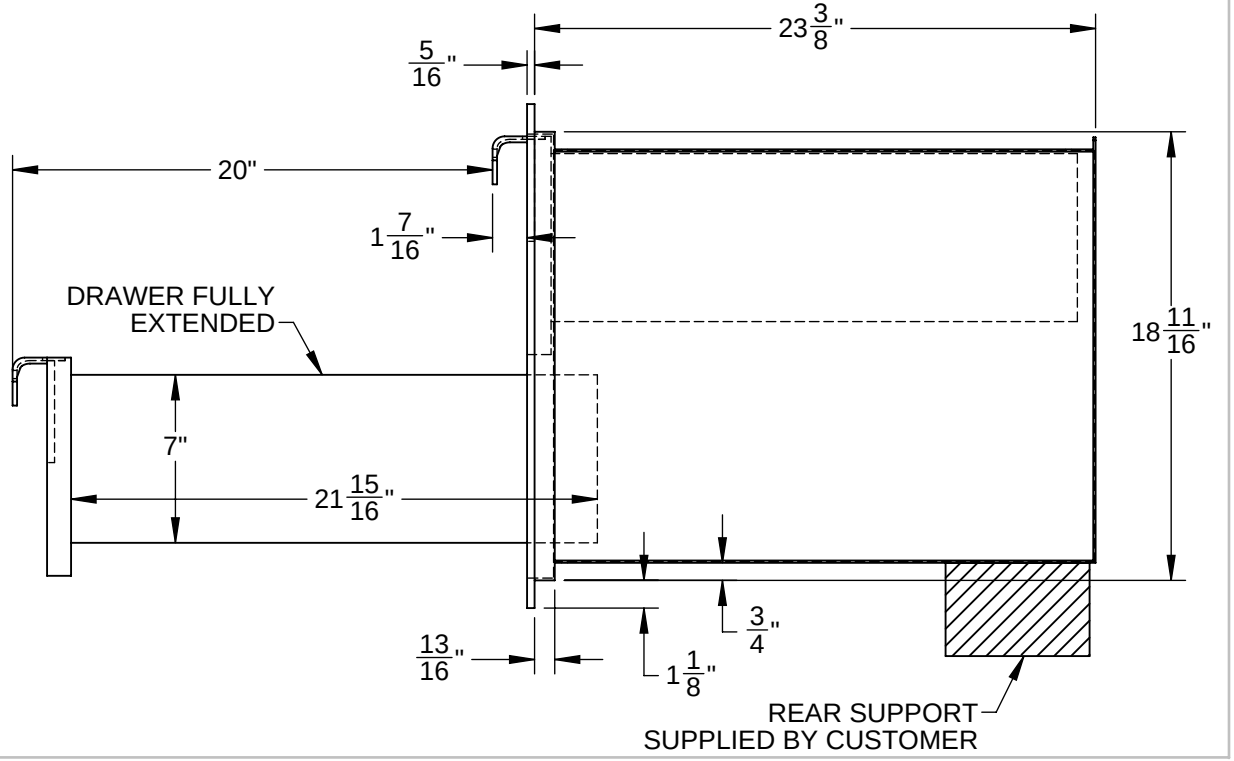

Revised: 09/12/2018